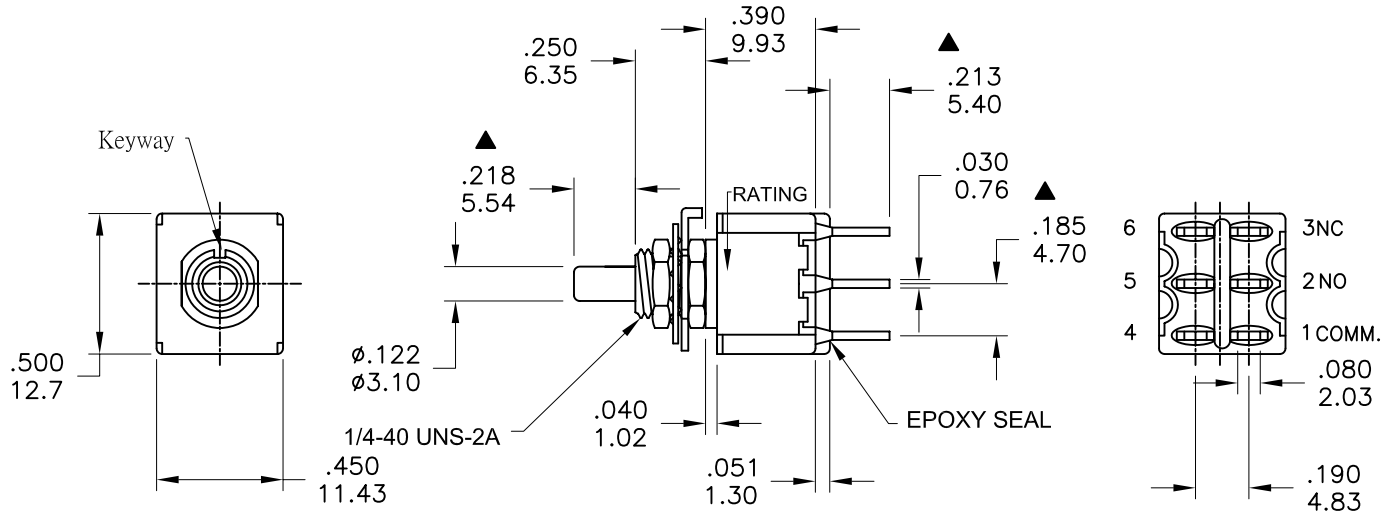

SWITCH FUNCTION	POS.1	POS.2
	ON	MOM
Term. Comm.	1-3,4-6	1-2,4-5
SCHEMATIC	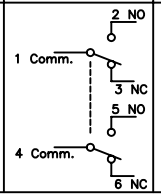	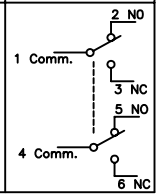

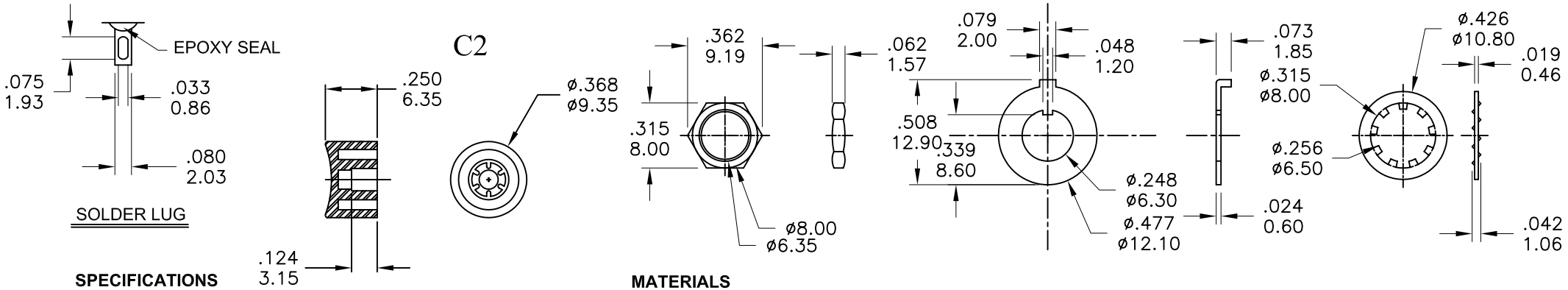

SPECIFICATIONS
MECHANICAL LIFE: 50,000 make-and-break cycles.
CONTACT RESISTANCE: 20mΩmax. initial @ 2-4VDC
100mA for both silver and gold plated contacts.
INSULATION RESISTANCE: 1,000MΩmin.
DIELETRIC STRENGTH: 1,000 V RMS@sea level.
OPERATING TEMPERATURE: -30°C to 85°C.

MATERIALS
CASE: Dially phthalate (DAP) (UL94v-0).
PLUNGER: Glass filled Nylon or Glass filled polyester.
BUSHING: Brass,nickel plated.
HOUSING: Stainless Steel.
CONTACT: Gold plated.

RATING :
0.4 VA max. @20VAC or DC max.

SCALE (比例) : 3 : 2	TITLE 圖 名	Snap-Acting Pushbutton Switches	SIZE 圖紙 A4
TOLERANCE (公差) : 0.00 mm ± 0.25mm 0.0 mm ± 0.40mm ANGULAR : ± 5°	DWG NO. 圖 號	SP0714	UNIT 單位 inch mm