Rating	3A 125V,1.5A 250V AC	Mounting Hole	Circuit Diagram
Contact Resistance	50m ohm Max.	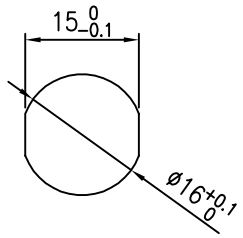	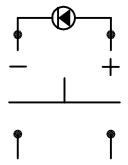 LED Rating: Red:If=20mA,Vf=2.0V Amber:If=20mA,Vf=2.1V Green:If=20mA,Vf=2.2V
Insulation Resistance	DC 500V 100M ohm Min.		
Dielectric Strength	AC 1500V 1 minute		
Operation Temperature	-20°C~85°C		
Switch Function	4P SPST OFF-ON (LED)		

Material:
Frame: Nylon#66+30%GF, Black
Actuator: PC
Printed: None

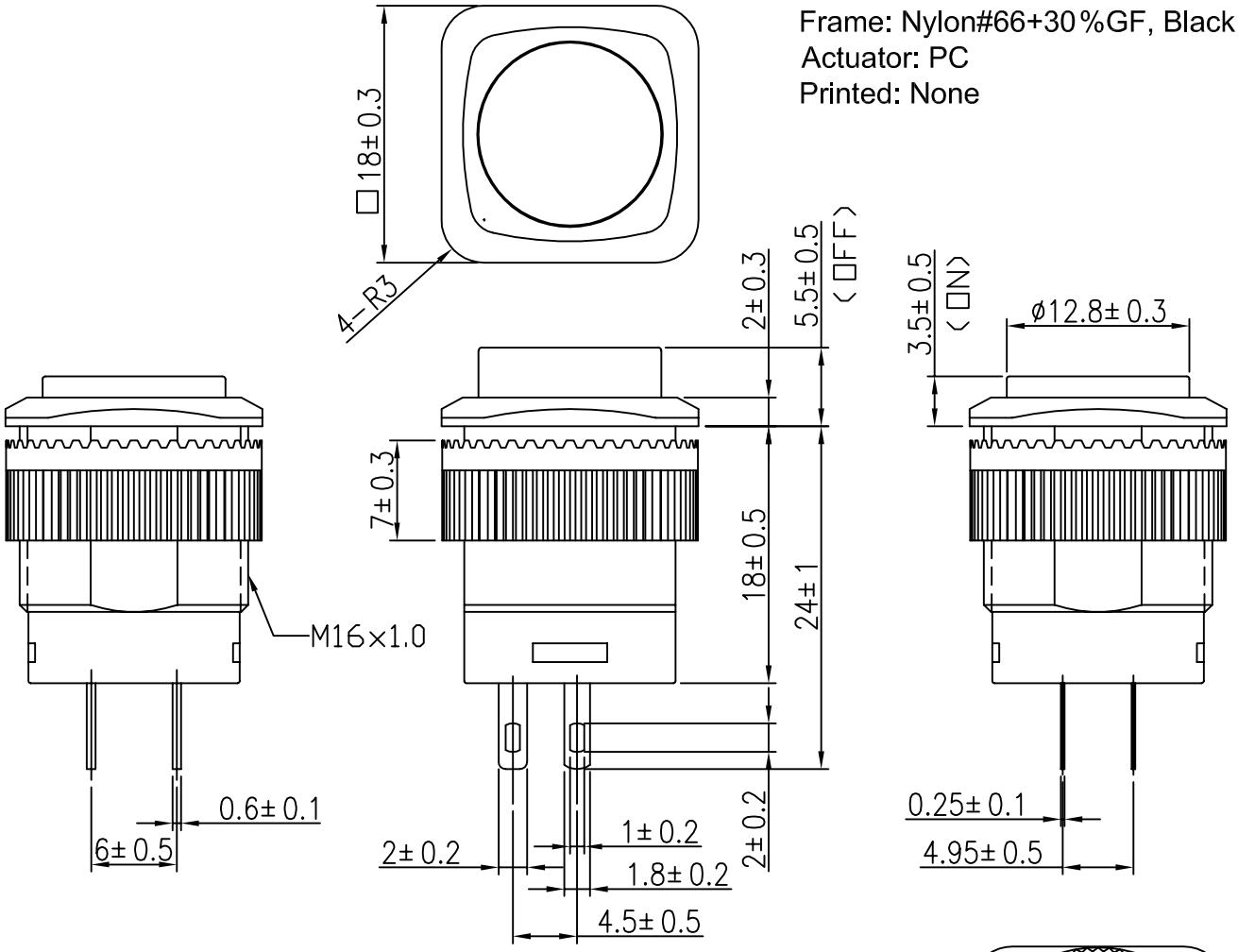

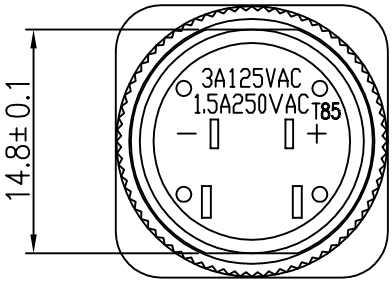

Red	Red
Actuator	LED Color

Unit : mm

	PART NAME	PUSH SWITCH
	PART NO.	SP0704