CAD FILE:

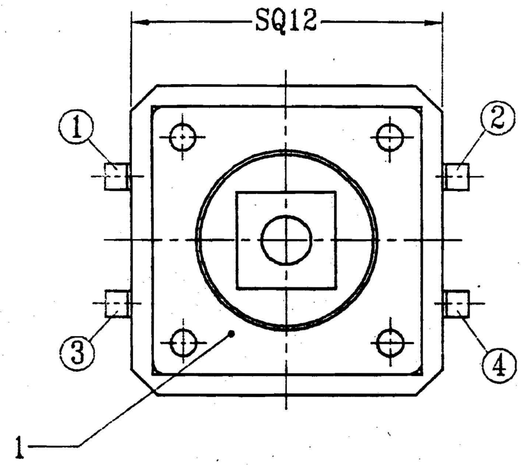

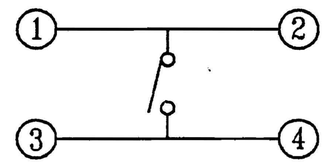

SCHEMATIC

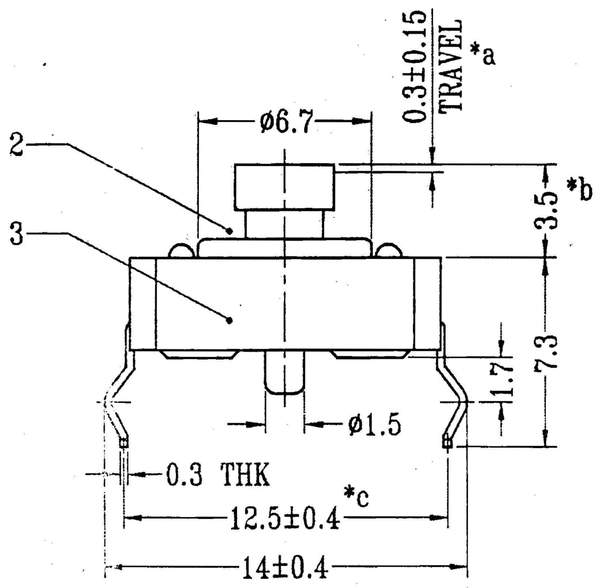

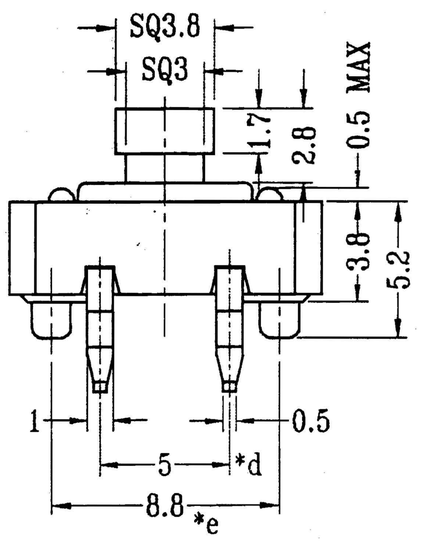

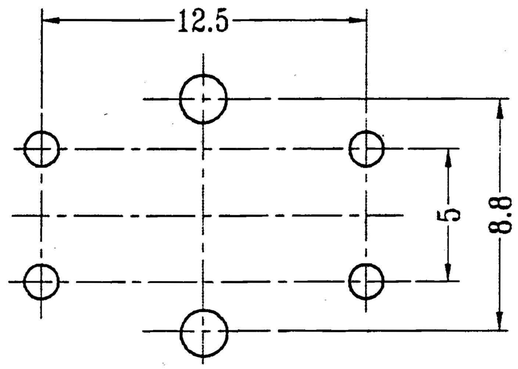

P.C.B LAYOUT

注 : "*" 表示關鍵尺寸(5個)

NO.	PARTS	MATERIALS	Q'TY	FINISH
8				
7				
6				
5				
4	CONTACT	PBS C5210R-EH	1	Ag CLAD
3	CASE	NYLON+F.G/BRASS STRIP	1	BLACK/Ag PLATED OVER Ni PLATED
2	KNOB	NYLON+F.G	1	BLACK
1	COVER	PET/ZINC PLATE	1	CLEAR/Ni PLATED

TOLERANCE UNLESS SPECIFIED
WITHIN 1.5mm : ±0.1mm
OVER 1.5mm : ±0.2mm

ISSUE	DATE	DESCRIPTIONS OF REVISION	APPD.
B	25-Oct-2005	修正零件用料以及修正關鍵尺寸個數	黃之傑

TITLE : TACT SWITCH

MODEL: TC-12ET

UNIT : mm

SCALE: 3:1

DRWG NO.: TT-DR-TC12ET-00

DWN.	陳 強	25-Oct-2005
CHK'D	邱旺	25-Oct-2005
APPD.	黃之傑	25-Oct-2005